24.Front Differential Assembly

A: REMOVAL

1) Remove the manual transmission assembly. <Ref. to 6MT-34, REMOVAL, Manual Transmission Assembly.>
2) Prepare the transmission for overhaul. <Ref. to 6MT-39, Preparation for Overhaul.>
3) Remove the oil pipe, neutral position switch, back-up light switch and harness. <Ref. to 6MT-41, REMOVAL, Oil Pipe.> <Ref. to 6MT-43, REMOVAL, Neutral Position Switch.> <Ref. to 6MT-42, REMOVAL, Back-up Light Switch.>
4) Remove the extension case. <Ref. to 6MT-44, REMOVAL, Extension Case.>
5) Remove the transfer driven gear. <Ref. to 6MT-56, REMOVAL, Transfer Driven Gear.>
6) Remove the center differential. <Ref. to 6MT-58, REMOVAL, Center Differential.>
7) Remove the oil pump. <Ref. to 6MT-59, REMOVAL, Oil Pump.>
8) Remove the transmission case. <Ref. to 6MT-63, REMOVAL, Transmission Case.>
9) Remove the individual gear assemblies. <Ref. to 6MT-68, REMOVAL, Main Shaft Assembly.>
10) Remove the drive pinion shaft assembly. <Ref. to 6MT-94, REMOVAL, Drive Pinion Shaft Assembly.>
11) Remove the retainer lock plates on both sides.

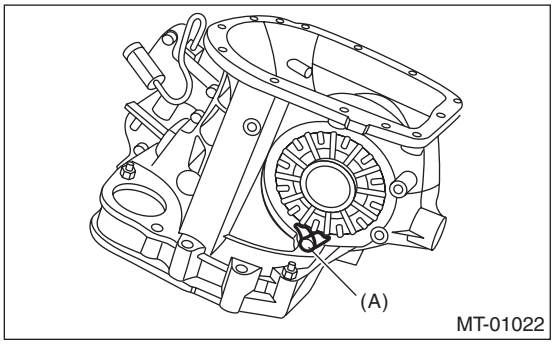

(A) Retainer lock plate

12) Remove the differential side retainers on both sides using the ST.
ST1 499787000 WRENCH ASSY (RH SIDE)
ST2 18630AA000 WRENCH ASSY (LH SIDE)

NOTE:
Be careful not to damage the section where the clutch case retainer will be attached.

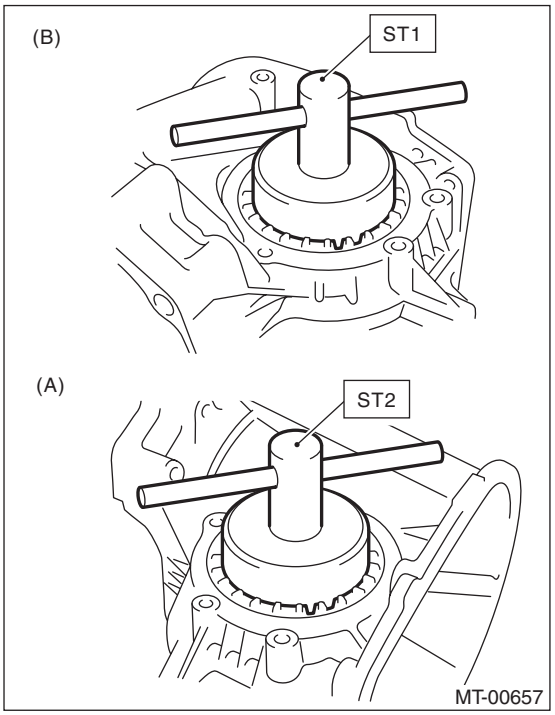

(A) LH side
(B) RH side

13) Remove the front differential.

B: INSTALLATION

1) Install the differential assembly to the clutch housing.
2) Apply oil to the screw threads of the differential side retainer.
3) Remove the O-rings on both sides of the differential side retainer.

4) Install the differential side retainers to both sides, using the ST.
ST1 499787000 WRENCH ASSY (RH SIDE)
ST2 18630AA000 WRENCH ASSY (LH SIDE)

NOTE:
Be careful not to damage the oil seal.

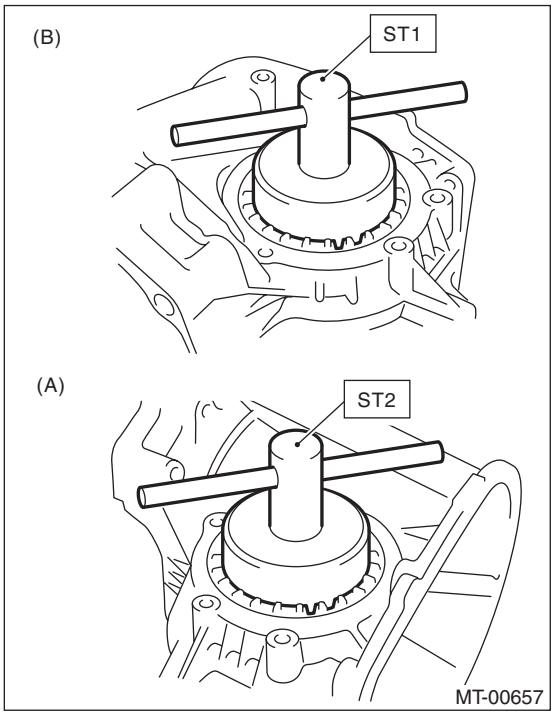

(A) LH side
(B) RH side

5) Inspect and adjust the hypoid gear backlash. <Ref. to 6MT-104, HYPOID GEAR BACKLASH, INSPECTION, Front Differential Assembly.>
6) Inspect and adjust the tooth contact. <Ref. to 6MT-97, ADJUSTMENT, Drive Pinion Shaft Assembly.>
7) Mark the mating positions of the left and right side retainers and the clutch housing.

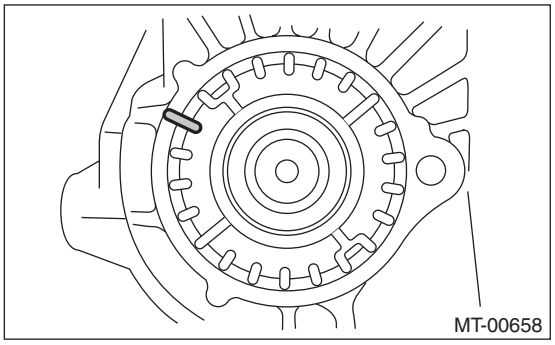

8) Remove the differential side retainers from both sides.

NOTE:
When removing the differential side retainer, record how many times it was turned to remove.

9) Install O-rings to the differential side retainers on both sides.
10) Attach the differential side retainers to both sides.

NOTE:
When attaching, turn the differential side retainer the same number of turns it took to remove, and align the marks.
11) Install the retainer lock plate.

Tightening torque:
25 N·m (2.5 kgf-m, 18.1 ft-lb)

NOTE:
Be careful not to confuse the left and right side retainer lock plates.

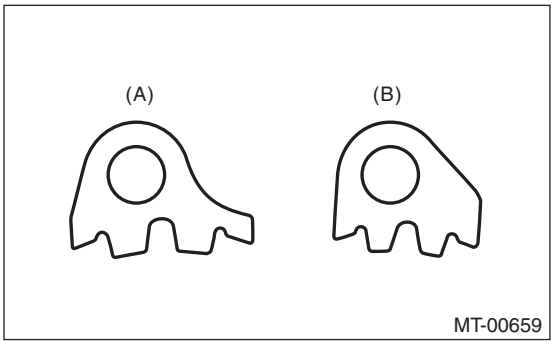

(A) LH
(B) RH

12) Remove any remaining liquid gasket from the clutch housing and adapter plate.
13) Apply liquid gasket to the clutch housing.

Liquid gasket:
THREE BOND 1215 (Part No. 004403007)

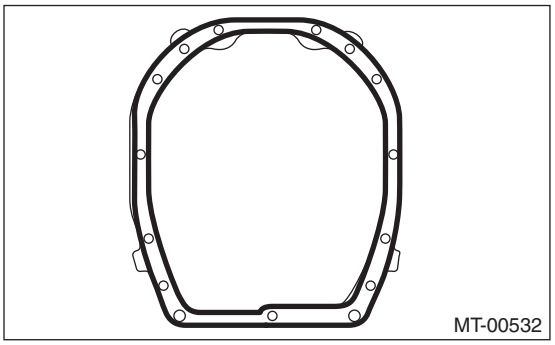

14) Install the drive pinion shaft assembly. <Ref. to 6MT-94, INSTALLATION, Drive Pinion Shaft Assembly.>
15) Install the individual gear assemblies all at once. <Ref. to 6MT-69, INSTALLATION, Main Shaft Assembly.>
16) Install the transmission case. <Ref. to 6MT-64, INSTALLATION, Transmission Case.>
17) Install the oil pump. <Ref. to 6MT-61, INSTALLATION, Oil Pump.>

18) Install the center differential. <Ref. to 6MT-58, INSTALLATION, Center Differential.>
19) Install the transfer driven gear. <Ref. to 6MT-56, INSTALLATION, Transfer Driven Gear.>
20) Install the extension case. <Ref. to 6MT-44, INSTALLATION, Extension Case.>
21) Install the oil pipe, neutral position switch, back-up light switch and harness. <Ref. to 6MT-41, INSTALLATION, Oil Pipe.> <Ref. to 6MT-43, INSTALLATION, Neutral Position Switch.> <Ref. to 6MT-42, INSTALLATION, Back-up Light Switch.>
22) Install the manual transmission assembly to the vehicle. <Ref. to 6MT-36, INSTALLATION, Manual Transmission Assembly.>

C: DISASSEMBLY

1. DIFFERENTIAL CASE

1) Fix the differential assembly on a vice, and remove the hypoid driven gear.

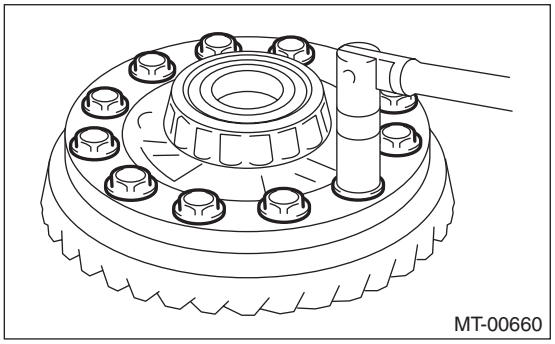

2) Remove the side bearing of the hypoid driven gear using the ST.
ST 399527700 PULLER SET

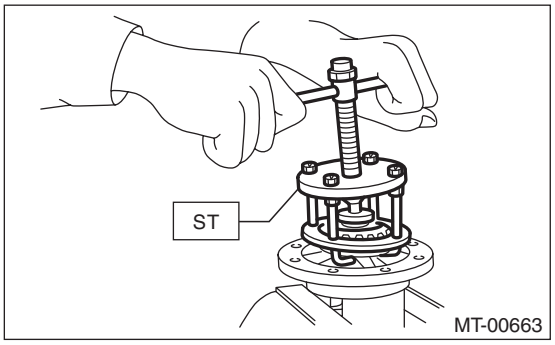

3) Use a flat tip screw driver to make a 2-3 mm (0.079 — 0.118 in) clearance between the speedometer drive gear and the roller bearing.

NOTE:
Be careful not to damage the differential case.

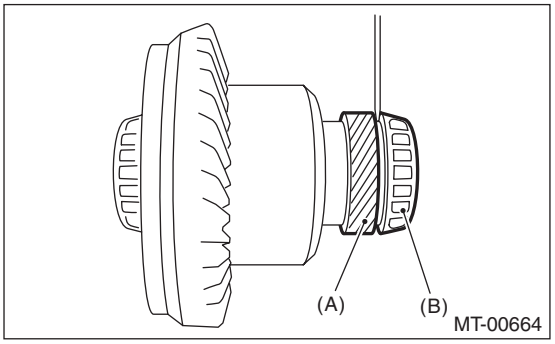

(A) Speedometer drive gear
(B) Roller bearing

4) Using the ST, remove the roller bearing.
ST 498077000 REMOVER

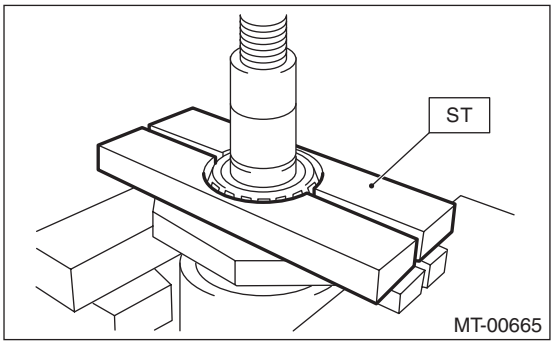

2. DIFFERENTIAL SIDE RETAINER

1) Remove the O-rings on both sides of the differential side retainer.

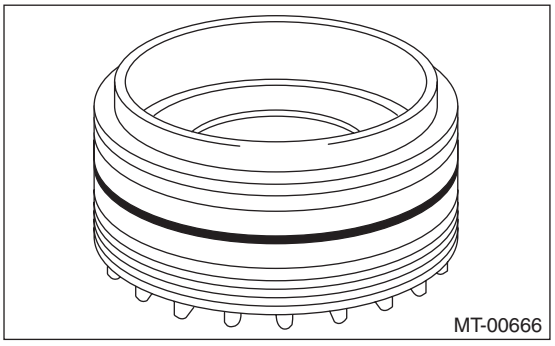

2) Remove the oil seal from the differential side retainer.

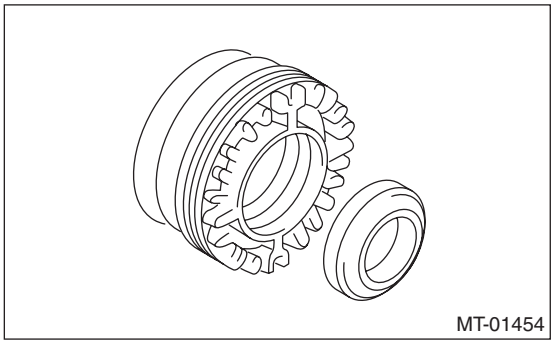

3) Remove the claw of ST1, and attach the claw of ST2.
ST1 398527700 PULLER ASSY
ST2 18760AA000 CLAW

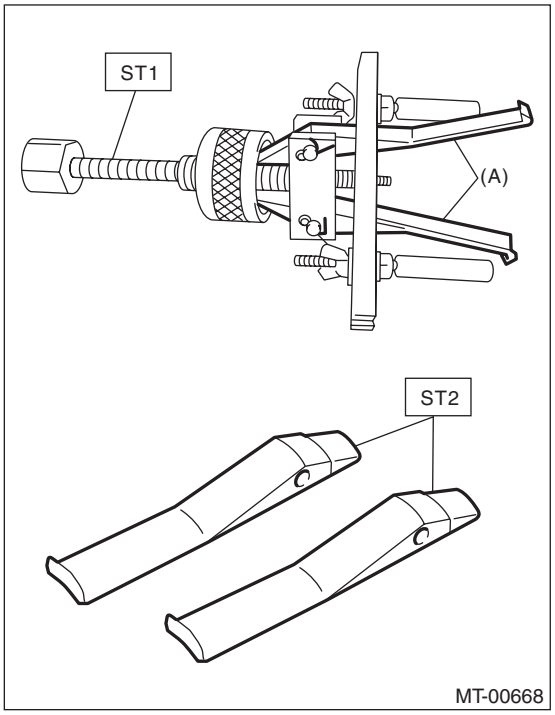

(A) CLAW

4) Remove the bearing outer race from the differential side retainer.
ST1 398527700 PULLER ASSY
ST2 18760AA000 CLAW

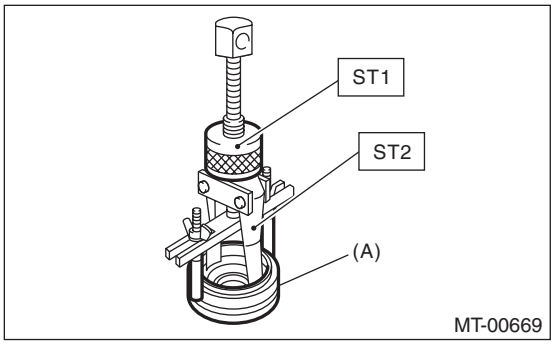

(A) Differential side retainer

D: ASSEMBLY

1. DIFFERENTIAL CASE

1) Use the ST to attach the new speedometer drive gear and RH and LH bearing inner races to the differential case.
ST1 398437700 INSTALLER
ST2 398497701 SEAT

CAUTION:
Do not apply pressure in excess of 20 kN (2.0 ton, 2.2 US ton, 2.0 Imp ton).

NOTE:
Always replace inner races and outer races as a set.

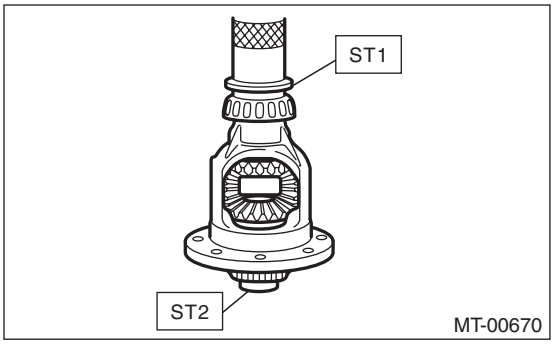

2) Attach the hypoid driven gear to the differential case.

Tightening torque:
69 N·m (7.0 kgf-m, 50.9 ft-lb)

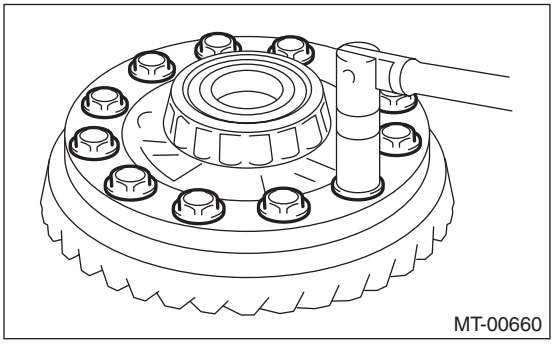

2. DIFFERENTIAL SIDE RETAINER

1) Using the ST, install the oil seal.
ST 18675AA000 DIFFERENTIAL SIDE OIL SEAL INSTALLER

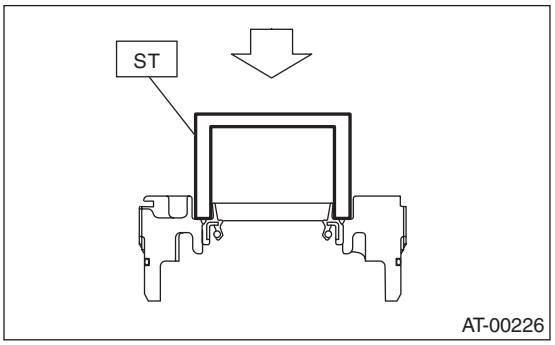

2) Attach the bearing outer race to the differential side retainers on both sides.
3) Install O-rings to the differential side differential side retainers on both sides.

NOTE:
Be careful not to damage the O-ring.

E: INSPECTION

Repair or replace the differential in the following cases:
- Damage, seizure, or excessively wear of each gear.
- Differential case sliding surface damage, seizure or excessive wear.
- Bearing and bearing section damage, rusting or wear
- If the bearing does not rotate smoothly or an abnormal noise is emitted when turning.

1. HYPOID GEAR BACKLASH

Inspect the hypoid gear backlash. Adjust if out of standard. <Ref. to 6MT-104, HYPOID GEAR BACKLASH, ADJUSTMENT, Front Differential Assembly.>

2. TOOTH CONTACT OF HYPOID GEAR

1) Check that the hypoid gear backlash is within the standard value. Adjust if out of standard. <Ref. to 6MT-104, HYPOID GEAR BACKLASH, ADJUSTMENT, Front Differential Assembly.>
2) Apply a thin uniform coat of red lead on the surfaces of 3 or 4 hypoid driven gear teeth.

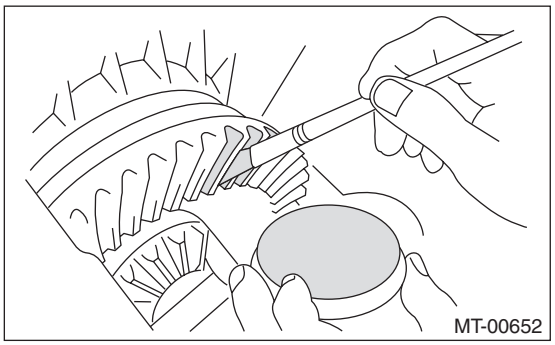

3) Attach the drive pinion shaft assembly, and affix with 5 bolts.

NOTE:
Use old gaskets and washers to prevent the mating surfaces of the housing from becoming damaged.

Tightening torque:
50 N·m (5.1 kgf-m, 36.9 ft-lb)

4) Turn the drive pinion shaft to the left and right for several turns.
5) Remove the drive pinion shaft assembly, and inspect the mating condition of the teeth. If tooth contact is not correct, perform adjustment. <Ref. to 6MT-97, ADJUSTMENT, Drive Pinion Shaft Assembly.>
- Correct tooth contact

NOTE:
In a no load condition, the tooth contact from the center to the toe side is 50-60% (While driving, the tooth contact will shift towards the heel side).

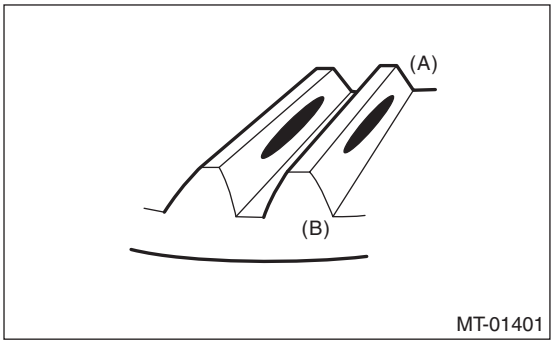

(A) Toe side
(B) Heel side

F: ADJUSTMENT

1. HYPOID GEAR BACKLASH

1) Attach the RH and LH differential side retainers.

ST1	18630AA010	WRENCH COMPL RETAINER (RH side)
ST2	18630AA000	WRENCH ASSY (LH side)

NOTE:
Screw in the RH differential side retainer a little further than the LH side.
2) Attach the drive pinion shaft assembly, and affix with 5 bolts.

NOTE:
Use old gaskets and washers to prevent the mating surfaces of the housing from becoming damaged.

Tightening torque:
50 N·m (5.1 kgf-m, 36.9 ft-lb)

3) Using the ST, loosen the differential side retainer RH, and twist in the differential side retainer LH until the hypoid driven gear just contacts the drive pinion.

ST1	18630AA010	WRENCH COMPL RETAINER (RH side)
ST2	18630AA000	WRENCH ASSY (LH side)

4) Use the ST to turn the drive pinion shaft a few times.
ST 18631AA000 HANDLE

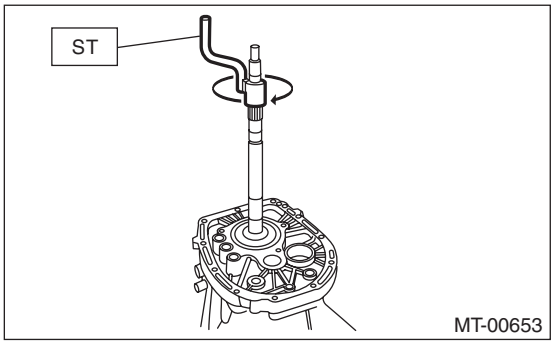

5) Repeat steps 3) and 4) until differential side retainer LH does not turn anymore. For differential side retainer RH, screw in until the inner race and outer race just comes into contact. This is the “zero” backlash state.
6) Mark the mating positions of the left and right side retainers and the clutch housing.

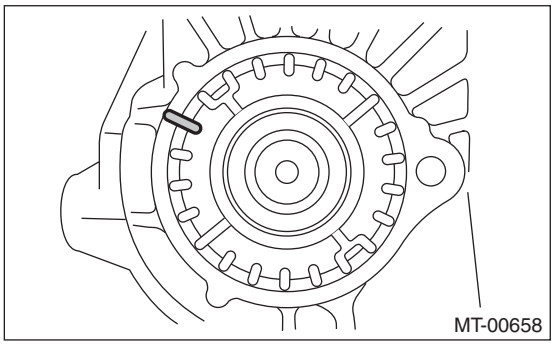

7) Turn the back differential side retainer LH by 3 notches, and screw in the differential side retainer RH by 3 notches.
8) Temporarily attach the LH side retainer lock plate.
9) Turn the differential side retainer RH by 1.25 notches.
10) Temporarily attach the RH side retainer lock plate.

NOTE:
- If the lock plate cannot be aligned, adjust the position toward the tightened side.
- The notch on the lock plate moves by 0.5 notch if the lock plate is turned upside down when installed.

11) Use the ST to fix the drive pinion shaft in place.
ST 18621AA000 ADAPTER WRENCH

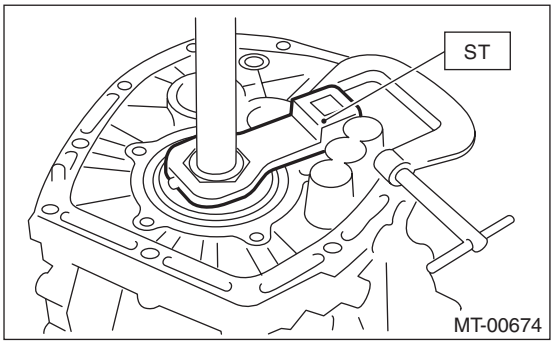

12) Attach the axle shafts to the right and left sides of the front differential.
Part No. 38415AA000AXLE SHAFT
13) Move the axle shaft, and measure the hypoid gear backlash.
ST1 498255400 PLATE
ST2 498247001 MAGNET BASE
ST3 498247100 DIAL GAUGE

Hypoid gear backlash:
0.13 — 0.18 mm (0.0051 — 0.0071 in)

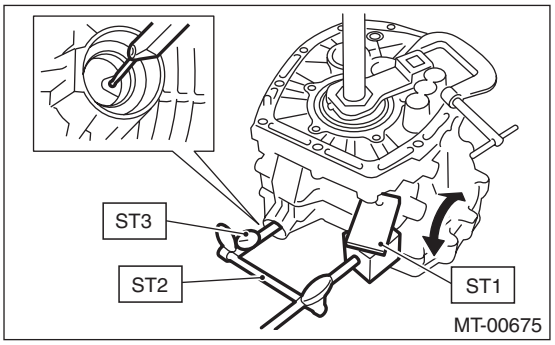

14) If the backlash is out of specified range, remove the left and right retainer lock plates and loosen RH side differential side retainer. Then, adjust the LH side differential side retainer by turning it, and attach the LH side retainer lock plate.
15) Screw in the RH side differential side retainer until the inner race and outer race just come into contact.

2. TOOTH CONTACT OF HYPOID GEAR

Regarding teeth contact conditions, refer to the drive pinion section. <Ref. to 6MT-104, TOOTH CONTACT OF HYPOID GEAR, INSPECTION, Front Differential Assembly.>